Installation and Operating Instructions

for

Vibratory Feeders

SRC-N 63-2
SRC-N 100-2

Table of Contents

1. Technical data 4

2. Safety Information 5
2.1. Applicable directives and standards 6

3. Design and functional description 7

4. Shipment and installation 8
4.1. Shipping and handling 8
4.1.1. Shipment ex works 8
4.1.2. On-site moving 8
4.2. Installation 8

5. Commissioning 9
5.1. Preparations 9
5.2. Operation 9

6. Maintenance 10

7. Spare parts and customer service 11

8. What if... ? (Advice on troubleshooting) 11

Declaration of Incorporation

according to Machinery Directive 2006/42/EC

We,
Company

Rhein-Nadel Automation GmbH
Reichsweg 19-23
52068 Aachen
Germany

herewith declare under our sole responsibility that with regard to the following product:

Machine designation: (function)	Vibratory feeder
Type designation:	SR(…)
Serial number	10865660 0001 2500000 0001

all relevant essential safety and health requirements of Directive 2006/42/EC have been fulfilled up to the battery limits.

The product to which this declaration refers is furthermore in conformity with following directives and standards or other regulations:

2006/42/EC	Machinery
2006/95/EC	Low Voltage
2014/30/EU	Electromagnetic Compatibility

EN	614-1	2006+A1:2009	EN ISO	13857	2008
EN	619	2002+A1:2010	EN ISO	14120	2015
EN	620	2002+A1:2010	EN	60204-1	2006
EN ISO		12100	2010		

The relevant technical documentation has been compiled in accordance with Annex VII B of the Machinery Directive and on request, such documentation will be transmitted to the competent authorities in hard copy.

Nico Altmeyer, Rhein-Nadel Automation GmbH, Reichsweg 19-23, 52068 Aachen

(Name and address of person authorised to compile the relevant technical documentation)

Notice: This machine must not be put into service until the complete system into which it will be incorporated has been declared to be in conformance with the provisions of the Directive.

Signatory information

Name: Dr. Hensen

Given name: Tobias

Function: Managing Director

Germany
Aachen,

Place and date

Signature

Notice
All vibratory feeders listed in this table shall be operated only in conjunction with an RNA controller and with a mains voltage of 230 V / 50 Hz. For special voltages and frequencies please refer to the separate data sheet.

1. Technical data

Vibratory feeder type[1]	**SRC-N 63-2**	**SRC-N 100-2**
Dimensions Ø x H (mm)	60 x 65	90 x 82
Weight (kg)	0.8	1.8
Degree of protection	IP 54	IP 54
Connecting cable length (m)	1.4	1.4
Power input[2)] (VA)	8	11
Current [2] (A)	0.04	0.055
Nominal magnet voltage [2)] / frequen-	230 / 50	230 / 50
Coil gap (mm)	0.3 - 0.4	0.3 - 0.4
Number of magnets	1	1
Vibration frequency (Hz^{-1})	100	100

[1] The last digit of the type designation indicates the vibration frequency: 2=100 Hz
[2] For special connected loads (voltage / frequency) see rating plate on the motor

Pin assignment:

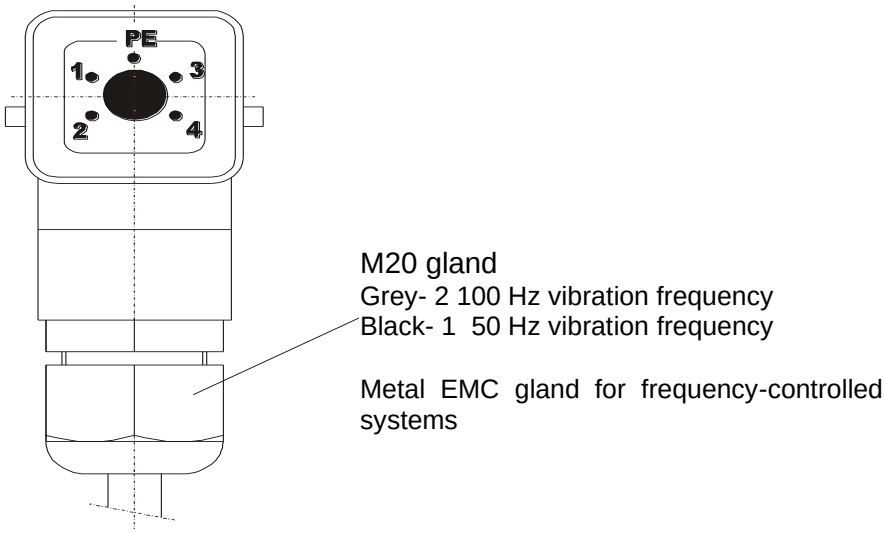

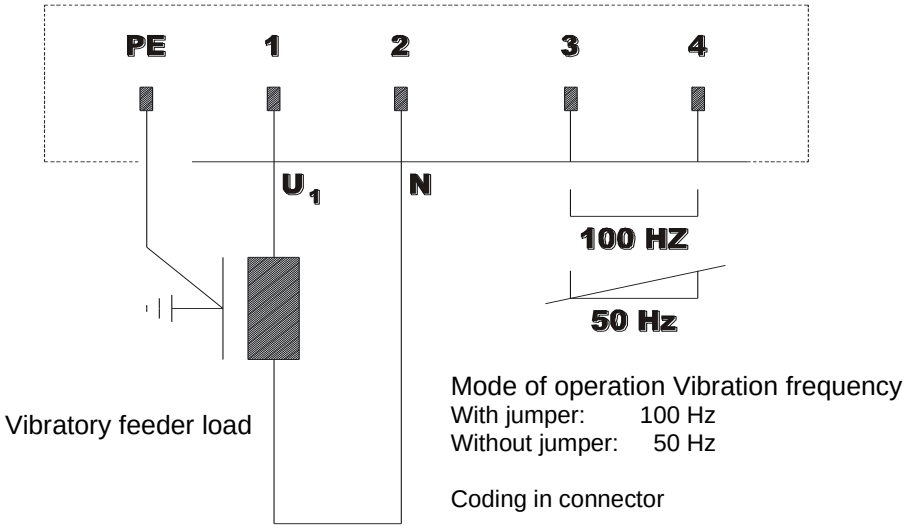

With jumper:
The jumper must be inserted between connections 3 + 4.

2. Safety Information

We have taken great care in design and manufacture of our vibratory feeder in order to ensure smooth and safe operation. You, too, can make an important contribution towards safety at work. We therefore ask you to read the brief operating instructions completely prior to commissioning the system. Observe the safety directives at all times!

Make sure that all persons working with or on the equipment also read the following safety directives carefully and follow them!

Thins operating instruction manual only applies to the feeder types indicated on the cover page.

Notice
This symbol indicates useful tips for operation of your vibratory feeder.

Attention
This warning triangle indicates safety notices. Non-observance of such warnings may cause serious injury or even death!

Machine hazards

- Hazards arise mainly from the electrical components of the vibratory feeder. If the vibratory feeder comes into contact with moisture or liquids there is a danger of electric shock.
- Make sure that protective earthing of the power supply system is in perfect condition!
- Never operate the vibratory feeder without guards and cover panels in place!

Intended use

The intended use of the vibratory feeder is the driving of sorting systems. They serve for linear transfer as well as correctly oriented and metered supply of bulk parts.

Any other use, for example as vibrating screen or for material inspection applications, is considered contrary to intended use.

Intended use also includes observance of the operating instructions and compliance with the maintenance rules. For the technical data for your vibratory feeder please refer to the table 'Technical Data' (Section 1). Make sure that the ratings of the vibratory feeder, control system and power supply are compatible.

Notice
Operate the vibratory feeder in perfect condition only.

Never operate the vibratory feeder in areas subject to explosion hazards or in wet areas.

Operate the vibratory feeder only in the configuration of drive unit, control unit and bowl agreed with the manufacturer.

The vibratory feeder must never be subjected to any loads other than the parts to be handled for which this special type has been rated and dimensioned.

Attention
It is strictly forbidden to disable any guards or safety devices!

Equipment user's duties

- Observe the directives given in the operating instructions for any kind of work (operation, maintenance, repairs, etc.).
- Refrain from any working practice that affects the safety at the vibratory feeder.
- Make sure that only authorised personnel work at the vibratory feeder.
- Give immediate notice to the management of any changes that have occurred on the vibratory feeder affecting safety.

Attention
The vibratory feeder must be installed, put into operation and maintained by professional personnel only. Observe the legally binding provisions for the qualifications of qualified electrical workers and instructed workers as defined by standards IEC 364 and DIN VDE 0105, part 1.

Caution: Electromagnetic field
Magnetic fields may affect a cardiac pacemaker. Therefore, persons wearing a cardiac pacemaker are recommended to keep a distance of at least 25 cm.

Notice
Electrical protection is provided by RNA's controller.

Noise emission
The noise level at the place of use depends on the complete line in which the hopper will be incorporated and on the material to be sorted. For this reason, sound pressure levels in accordance with the 'Machinery' directive can only be determined at the place of installation.

2.1. Applicable directives and standards

The linear feeder has been manufactured in accordance with the following directives:

2006/42/EC Machinery Directive
2014/35/EU Low Voltage Directive
2014/30/EU Electromagnetic Compatibility Directive

We assume that our product will be incorporated into a stationary machine.
The applicable standards are specified in the Declaration of Incorporation (according to Annex II B of the Machinery Directive).

3. Design and functional description

Vibratory feeders serve for feeding and orienting parts. The driving force is provided by an electromagnetic coil. The figure below is a schematic representation of a vibratory feeder:

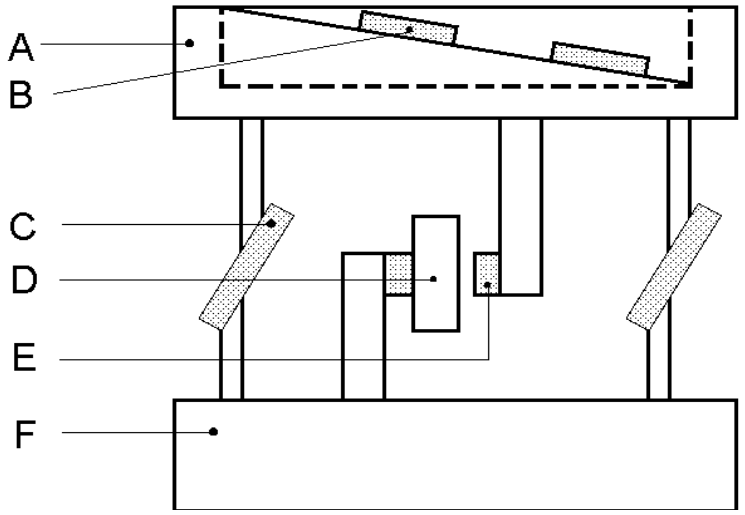

A Feed bowl
B Parts handled
C Spring pack
D Drive magnet
E Armature
F Exciter mass

Driving magnet D is rigidly connected to counter mass F. When the driving magnet is energized it exerts a force on armature E. This force is transmitted to bowl A mounted on spring packs C. The angle of the spring packs defines the direction of bowl movement.

Due to vibrations the parts are briefly lifted off the spiral track surface and thrown forward in tiny steps (micro throw principle). The direction of this throwing movement is perpendicular to the plane of the spring packs.

The driving magnet achieves its maximum power of attraction twice within each period of the alternating current. Consequently, the vibration frequency is double the mains frequency.

The vibration frequency of your feeder is indicated by the last digit of its type designation:

-2 = 100 Hz-100 vibrations / sec.

A vibratory feeder is a resonant system (spring-mass system). As a result, its factory set-up will rarely meet your on-site requirements. Section 5 describes in detail how you can adapt the vibratory feeder to your specific requirements.

Our optional accessories include a range of bowls covering a wide field of applications. For special applications we offer customized solutions.

The vibratory feeder is controlled by a low-loss electronic control unit. The choice of the control unit depends on the power input of the feeder. The following table indicates which control units can be used for which type of vibratory feeder:

	ESG 2000	ESK 2000	ESG 1000
SRC-N 63	x	x	x
SRC-N 100			

The control unit of the vibratory feeder is mounted on the baseplate. If no baseplate is fitted, it is delivered as a separate item. The controller has a 5-pin connector on its front panel for connection to the vibratory feeder.

Connector pin assignment is shown in the table 'Technical data' in chapter 1 of this operating instructions manual.

Notice
For comprehensive information on the full range of control devices please refer to the 'Control

Units' operating instructions.

All control units have two essential operating elements:

- The **power switch** is used to energize and de-energize the vibratory feeder.
- A **rotary knob** (or buttons) can be used to set the feed rate of the orienting device.

Frequency controllers: For tuning of the vibratory feeders you may also use frequency controllers. For detailed description of the tuning procedure refer to the frequency controller operating instructions.

4. Shipment and installation

4.1. Shipping and handling

4.1.1. Shipment ex works

Vibratory feeders are delivered ex works in wooden crates.

4.1.2. On-site moving

The weight of the vibratory feeder depends on its dimensions and motor rating. Please refer to the shipping documents for the weight of your specific equipment.

Attention
Check all guards when unpacking. Replace any damaged parts before commissioning!

Attention
For lifting the feeders be sure to use only sufficiently dimensioned vehicles, ropes, chains and sling gear.

Attention
Handling operations to be carried out only by employees who are capable of performing such work due to their own knowledge and experience in this field.

Warning
Warning against suspended loads

4.2. Installation

Attention
The vibratory feeder is intended to complete / to be incorporated into a complete system. Do not operate the machine before safe completion/incorporation by the user.

The unit is delivered in completely assembled state.

The vibrator must be bolted to a solid substructure in a dry shop, the ambient temperature should be between -10 °C and +50 °C. Make sure that the vibratory feeder cannot touch other devices during operation!

The vibratory feeders are firmly attached from below to the threaded fixing bolts on a mass of at least 15 to 20 kg.

Vibratory Feeder Type	Hole circle Ø	Hole circle angle	Fixing screws
SRC-N 63	40	2 x 180 °	M4
SRC-N100	70	3 x 120 °	M4

For further details on the control unit (drilling template, etc.), please refer to the separate operating instructions manual of the control unit.

5. Commissioning

5.1. Preparations

Attention
Make sure that the machine frame (rack, substructure, etc.) is connected to the protective earth conductor (PE). Protective earthing has to be provided by user as necessary.

Verify that the vibratory feeder is arranged freely without contact to any solid body.

-
- the bowl is firmly bolted in place
- the vibratory feeder connecting cable is plugged into the control unit.

Attention
Electrical connection of the vibratory feeder must be made by trained professional electricians only! When making any change to the electrical connection make absolutely sure that the 'Control Units' operating instructions are duly observed.

- The available electricity supply (frequency, voltage, power) must correspond to the connection data of the control system (see rating plate on the control unit).

Plug the cable of the control unit into a power socket and operate the power switch to energize the control unit.

Notice
For vibratory feeders that are supplied as a completely set-up system the optimum feed rate has been factory-set. It is marked with a red arrow on the dial of the rotary knob. In this case set the rotary knob to this mark.

Optimum tuning is achieved when the desired feeder speed is obtained with a controller setting of 80 %. In case of larger deviations (> +/- 15%) you should re-tune the system.

Vibratory feeders are factory-tuned for standard feed bowls (without orienting devices).

5.2. Operation

To adjust the air gap raise or lower the magnet coil which is locked in place by a threaded pin

<u>Adjusting the magnet coil:</u>

1. Mount the feeder on a solid base.
2. Loosen the fixing screw of the magnet coil. (This screw is situated in the side of the countermass, opposite the cable outlet.)
3. Turn the height adjustment screw of the magnet coil to adjust the air gap. (This screw is situated in the side of the countermass, between the cable outlet and the fixing screw of the magnet coil.)
4. Tighten the fixing screw.

To ensure optimum sorting behaviour the vibratory feeder has to be fine-tuned for the actual local operating conditions. As the feeders now come with a complete plastic spring basket, the feeder speed can only be adjusted by adding / removed weight to / from the vibrating mass.

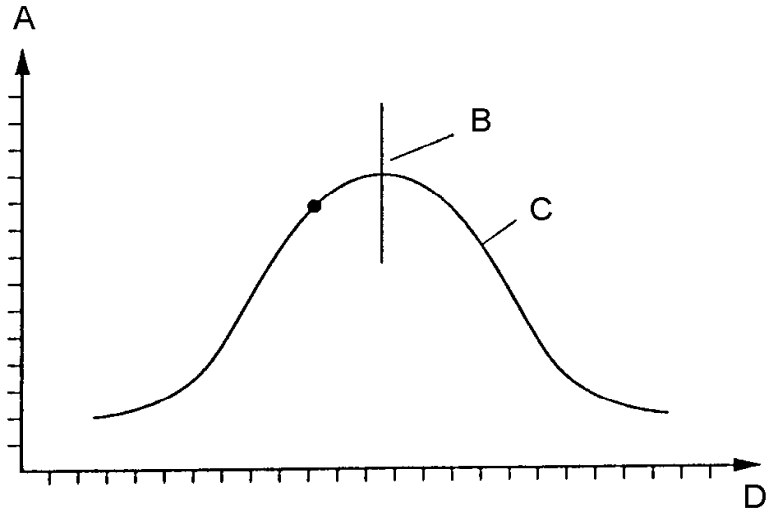

A Feed rate
B Resonance frequency of the system
C Resonance curve (not true to scale)
D Additional weight on vibrating mass

The following graph shows the resonance curve of a vibratory feeder.

Notice
The resonance frequency of the vibratory feeder must not be equal to the mains frequency.

The vibratory feeder should be tuned so that the desired feeder speed is obtained with a controller setting of approx. 80%.

6. Maintenance

Vibratory feeders basically require no maintenance. They should only be cleaned when soiled or after coming into contact with liquids.

- Before starting such work pull the mains plug.
- Remove the enclosure.
- Clean the inside of the vibratory feeder, and in particular the air gap of the coil.
- After remounting the enclosure and plugging in the mains plug the vibratory feeder is again ready for operation.

Achtung

Attention
For installation, maintenance and repair work all poles of the power supply must be disconnected from the linear feeder in compliance with VDE provisions. Any work on electrical equipment of the linear feeder shall be carried out exclusively by a professional electrician, or by instructed persons (see chapter 2) working under the direction and supervision of a professional electrician, according to electrotechnical rules.

Attention
Be careful around the vibratory feeder! The magnets can get hot during operation. Therefore let magnets cool down before working on them. If this is not possible, take suitable protective measures such as the use of gloves.

Achtung

Attention
If any guards have been removed, be sure to fit them back in place!

7. Spare parts and customer service

For an overview of genuine spare parts available please refer to the separate spare parts list.

In order to make sure that your order is processed swiftly and correctly please specify the device type (see rating plate), the quantity required, the spare part designation and the spare part number.

- Device type (see rating plate)
- Required quantity
- Spare part designation
- Spare part number

For a list of Service Center addresses refer to the back cover page of this manual.

8. What if... ? (Advice on troubleshooting)

Attention
Only professional electricians are allowed to open the control unit or connector. Pull the mains plug before opening!

Fault	Potential cause	Remedy
Vibratory feeder does not start on power up	Mains connector of control unit not plugged-in	Plug in the mains connector
	Connecting cabled between vibratory feeder and control unit not plugged-in	Plug 5-pin connector into control unit
	Sensor defective, misaligned or OFF	Re-adjust the sensor and check if it is plugged in. Replace sensor as necessary
	Defective fuse in control unit	Replace fuse
	Power switch off	Close power switch
	Magnet coil defective	Have magnet coil examined by professionals and replace if necessary
Vibratory feeder vibrates only slightly	Controller set at 0 % on control unit	Set control unit to 80 %

Headquarters

Rhein-Nadel Automation GmbH
Reichsweg 19-23
D-52068 Aachen
Phone: +49 (0)241-5109-0
E-mail: vertrieb@RNA.de
www.RNA.de

Further RNA group companies:

PSA Zuführtechnik GmbH
Steinäckerstraße 7
D-74549 Wolpertshausen
Phone: +49 (0)7904-94336-0
E-mail: info@psa-zt.de
www.psa-zt.de

RNA Automation Ltd.
Unit C Castle Bromwich Business Park
Tameside Drive Birmingham B35 7AG
Great Britain
Phone: +44 (0)121-749-2566
E-Mail: sales@rnaautomation.com
www.rnaautomation.com

HSH Handling Systems AG
Wangenstraße 96
3360 Herzogenbuchsee
Switzerland
Phone: +41 (0)62-956 10-00
E-mail: info@handling-systems.ch
www.handling-systems.ch

RNA Vibrant S.A.
Carrer de l'Energia
08940 Cornella de Llobregat (Barcelona)
Spain
Phone: +34 (0)93-377-7300
E-mail: info@vibrant-RNA.com
www.vibrant-RNA.com

RNA Digital Solutions GmbH
Reichsweg 19-23
D-52068 Aachen
Phone: +49 (0)1515-99 28 255
E-mail: kontakt@rnadigital.de
www.designforfeeding.com
www.rnadigital.de

Further manufacturing sites of the RNA Group

Lüdenscheid site

Rhein-Nadel Automation GmbH
Nottebohmstraße 57
D-58511 Lüdenscheid
Phone: +49 (0) 2351 -41744
E-mail: werk.luedenscheid@RNA.de

Ergolding site

Rhein-Nadel Automation GmbH
Ahornstraße 122
D-84030 Ergolding
Phone: +49 (0) 871 -72812
E-mail: werk.ergolding@RNA.de

Remchingen site

Rhein-Nadel Automation GmbH
Im Hölderle 3
D-75196 Remchingen-Wilferdingen
Phone: +49 (0)7232-7355-558
E-mail: werk.remchingen@RNA.de